Front View (Scale1:6)

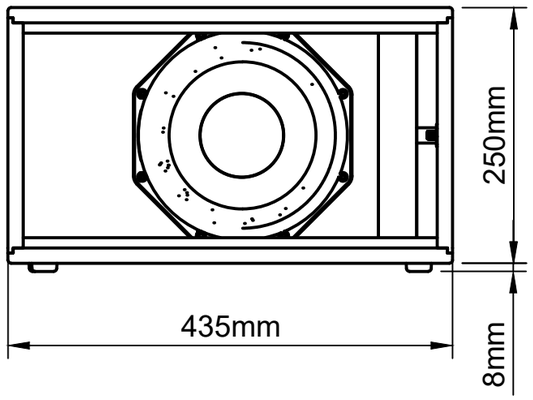

Right View (Scale1:6)

DIMENSIONS APPLY TO BOTH SIDES

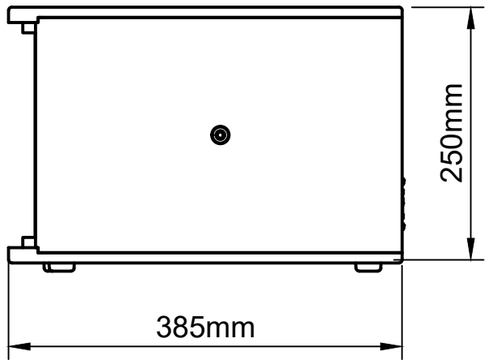

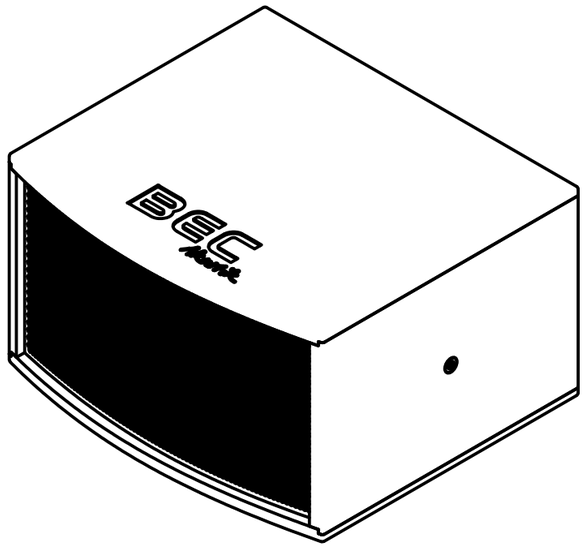

Rear View (Scale1:6)

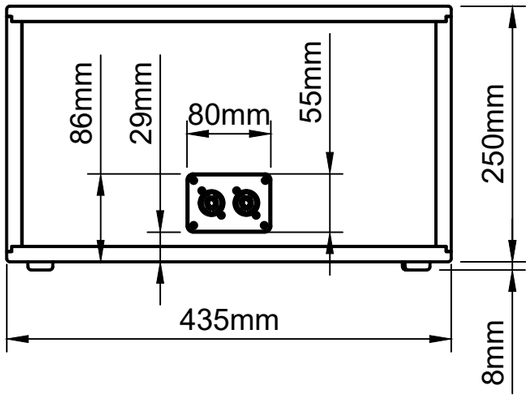

Top View (Scale1:6)

DIMENSIONS APPLY TO BOTH SIDES

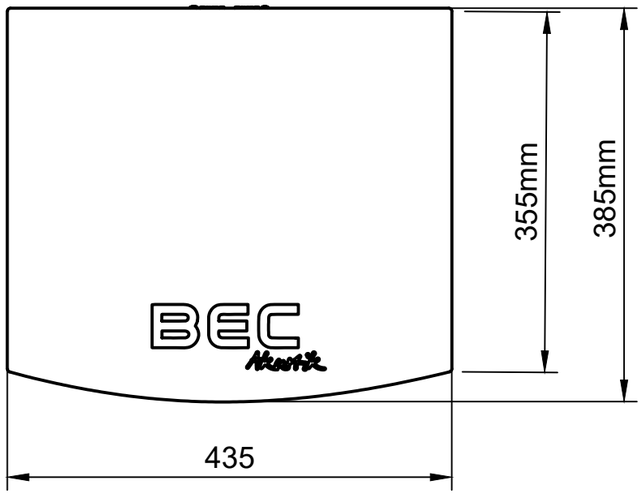

BEC Akustik	DESCRIPTION BEC-Akustik Paul 8.1 V3	Errors and omissions excepted (E&OE)
	NOTICE 2025 BEC Produktmanagement mbH THIS DRAWING MAY NOT BE COPIED, REPRODUCED, OR USED AS THE BASIS FOR MANUFACTURE OR SALE OF APPARATUS WITH OUT THE PRIOR WRITTEN AUTORIZIATION OF BEC Gesellschaft für Produktmanagement mbH	DIMENSIONS UNLESS OTHERWISE SPECIFIED MILLIMETERS
		DO NOT SCALE DRAWING DATE 20.12.25 Version V1